CLASS Users' Conference

Network & Archive Infrastructure

John Kinsfather - NGDC

August 11, 2005

NCAR – Boulder, CO

NOAA Satellites and Information

National Environmental Satellite, Data, and Information Service

Outline

- **CLASS background**
- **Data Ingest Volumes**
- **Network Architecture**
- **Storage Architecture**
- **Technology Challenges**

CLASS

- **Comprehensive Large Array data Stewardship System**
  - Ingest & archive observational data
  - Suitland – Data Processing node
  - Fairmont – Test & Development node
  - Asheville & Boulder – Archive nodes
  - Address ***retrospective*** data access user requirements

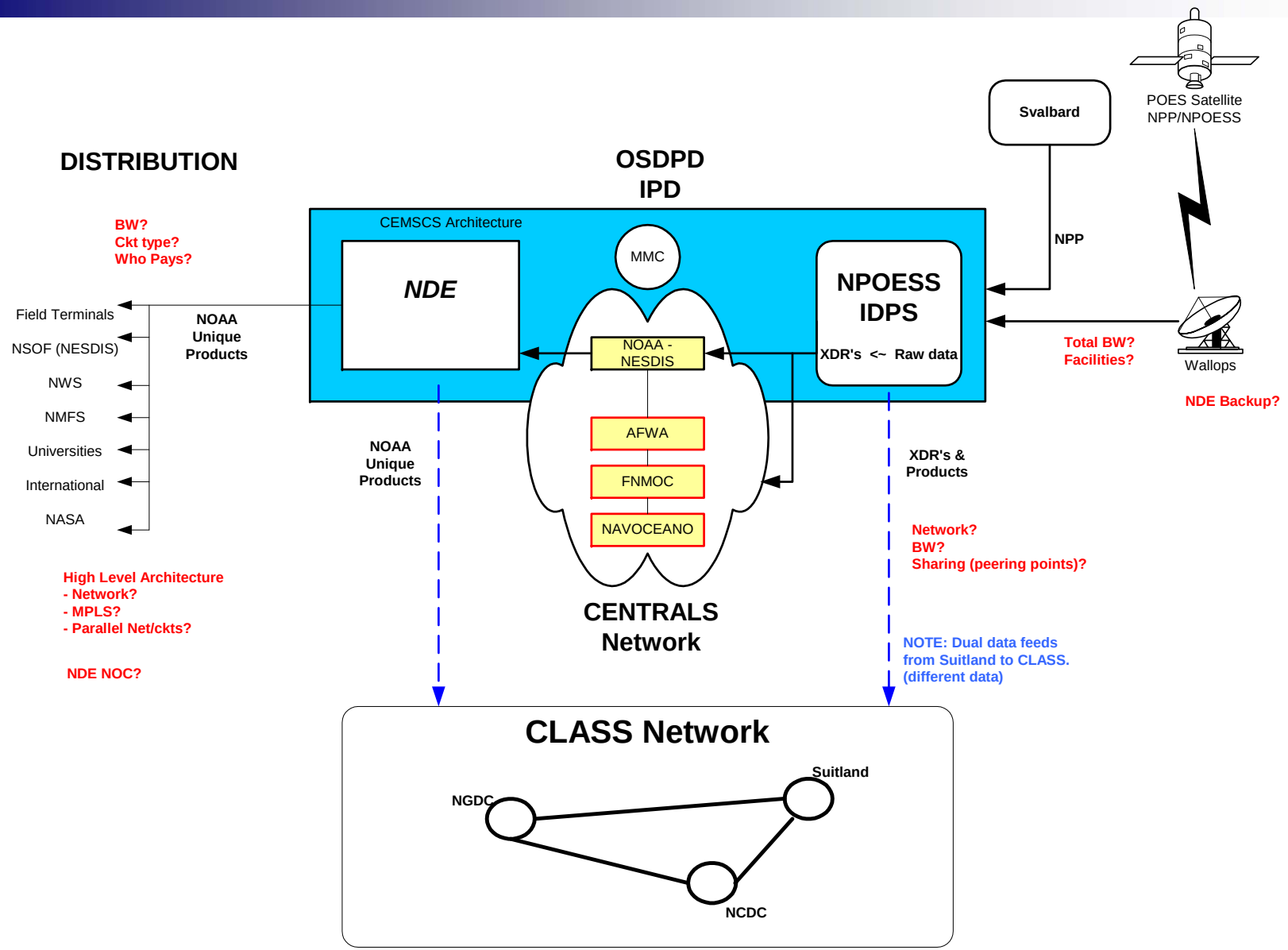

NOAA Satellites and Information

National Environmental Satellite, Data, and Information Service

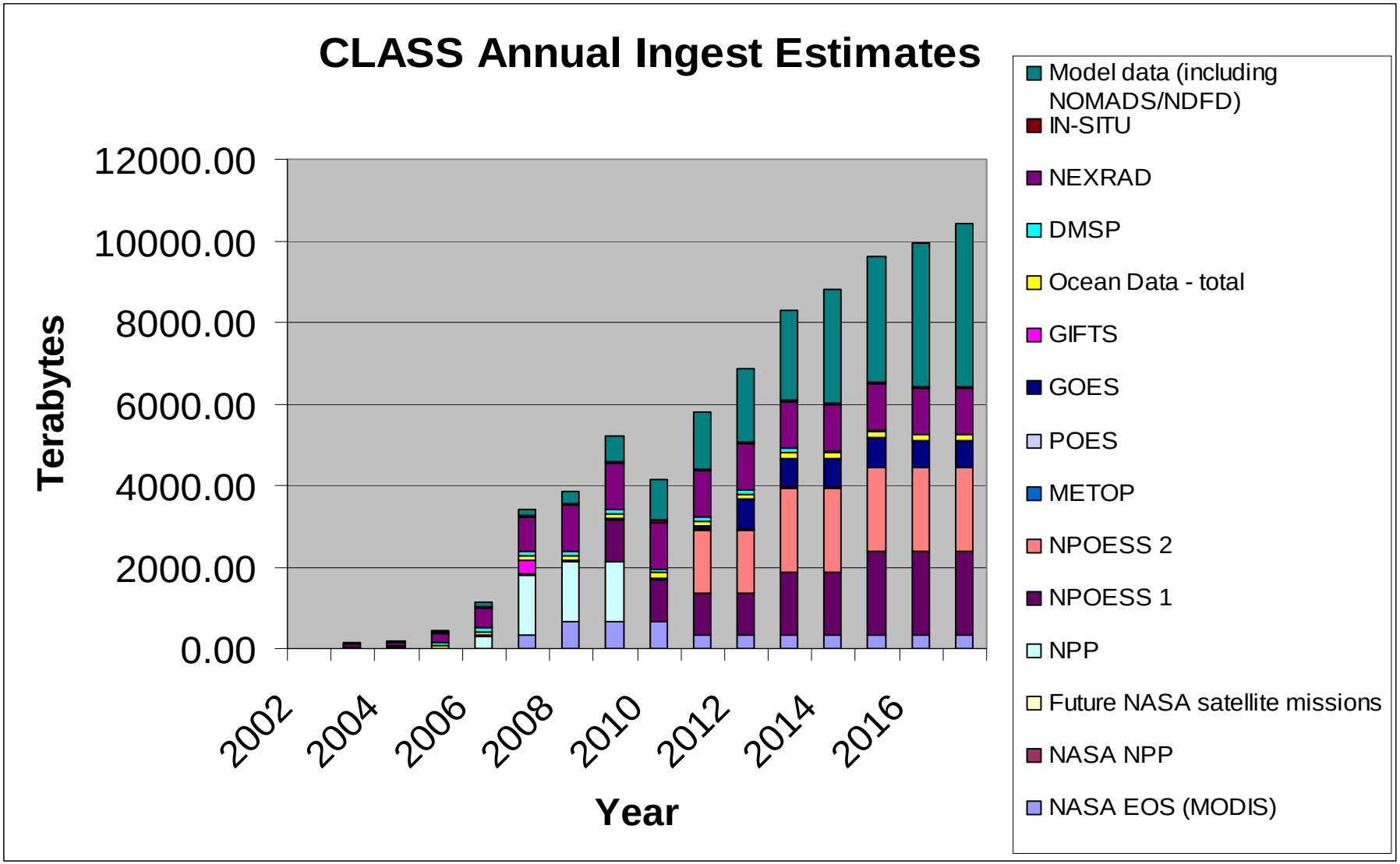

NOAA Satellites and Information

National Environmental Satellite, Data, and Information Service

Data Campaign Milestones

- **Projected MAJOR campaign volumes**

2005: POES & GOES	> 0.5 TB/day
2006: EOS/MODIS	1.8 TB/day
2008: NPP	4.1 TB/day
2009: NPOESS 1	7.1 TB/day
2011: NPOESS 2	7.1 TB/day
2012: GOES-R	2.0 TB/day
	22.1 TB/day

Network Architecture

- Suitland (OSDPD), Asheville (NCDC), Boulder (NGDC), Fairmont (TMC)
- Boulder and Asheville will be fully redundant
- OC-3's for now, then OC-48 and beyond
- Cisco 7606 router & 6509 firewall
- VPN over NOAA Network MPLS
- National Lambda Rail (NLR) for future high-bandwidth traffic requirements (future)

Network Requirements

Ingest Rates	Mbps	Network Service	
	45	T-3	
1.0 TB/day	93		
	155	OC-3	
10.0 TB/day	926		
	2,500	OC-48	
100.0 TB/day	9,260		

CLASS WAN

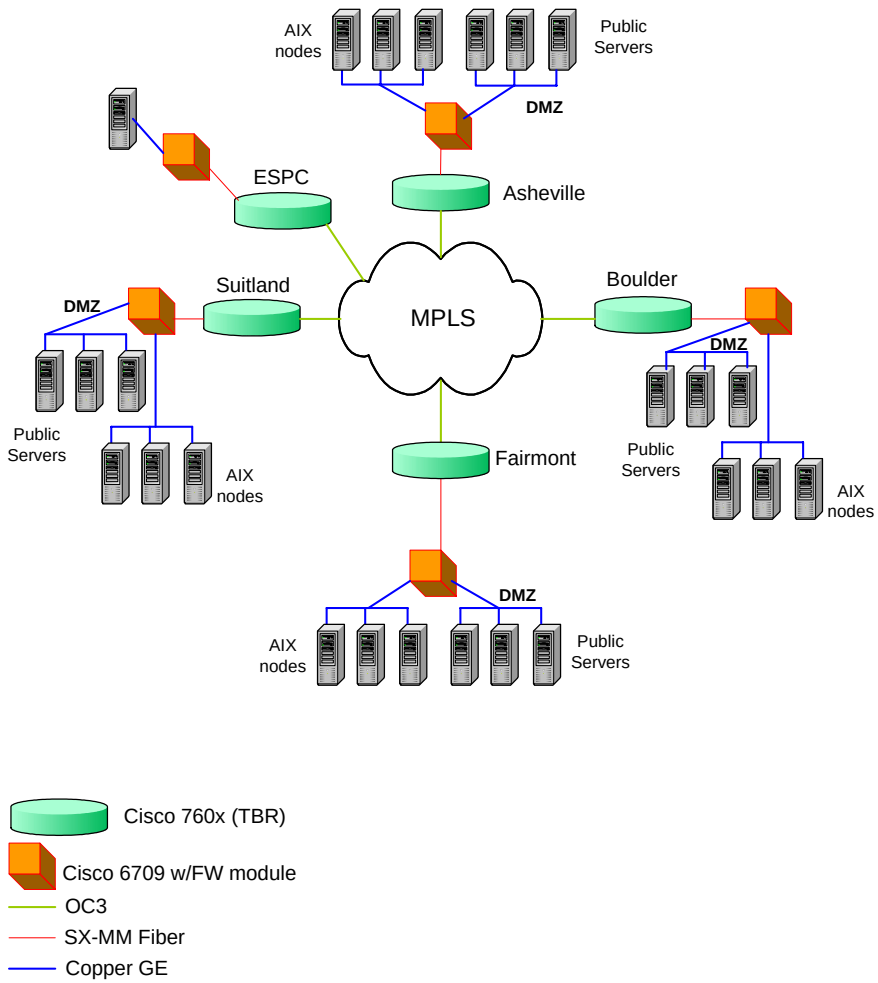

NOAA Satellites and Information

National Environmental Satellite, Data, and Information Service

Telecom Challenges

- **Bandwidth - Bandwidth- Bandwidth**
- Security
- Availability, reliability & robustness
- Utilize NLR, Internet 2 & 3 technologies

Storage Architecture

- ADIC Shared File System & Hierarchical Storage Management (StorNext)
- Servers: SGI(IRIX), IBM(AIX), Dell(LINUX)
- Data Direct Disk - ~1.0 PB
- Tape - LTO3 (.4-.8TB), LTO4 (.8-1.6TB)
- Tape robotics – ADIC, IBM or STK

Tape Storage Requirements

Ingest Rates	**# LTO-2** (.2 TB)	**# LTO-3** (.4 TB)	**# LTO-4** (.8 TB)
1.0 TB/day	5	2.5	1.25
10.0 TB/day	50	25	12.5
100.0 TB/day	500	250	125
Cumulative Vol.			
1.0 PB	5,000	2,500	1,250
10.0 PB	50,000	25,000	12,500
100.0 PB	500,000	250,000	125,00

CLASS @ NGDC

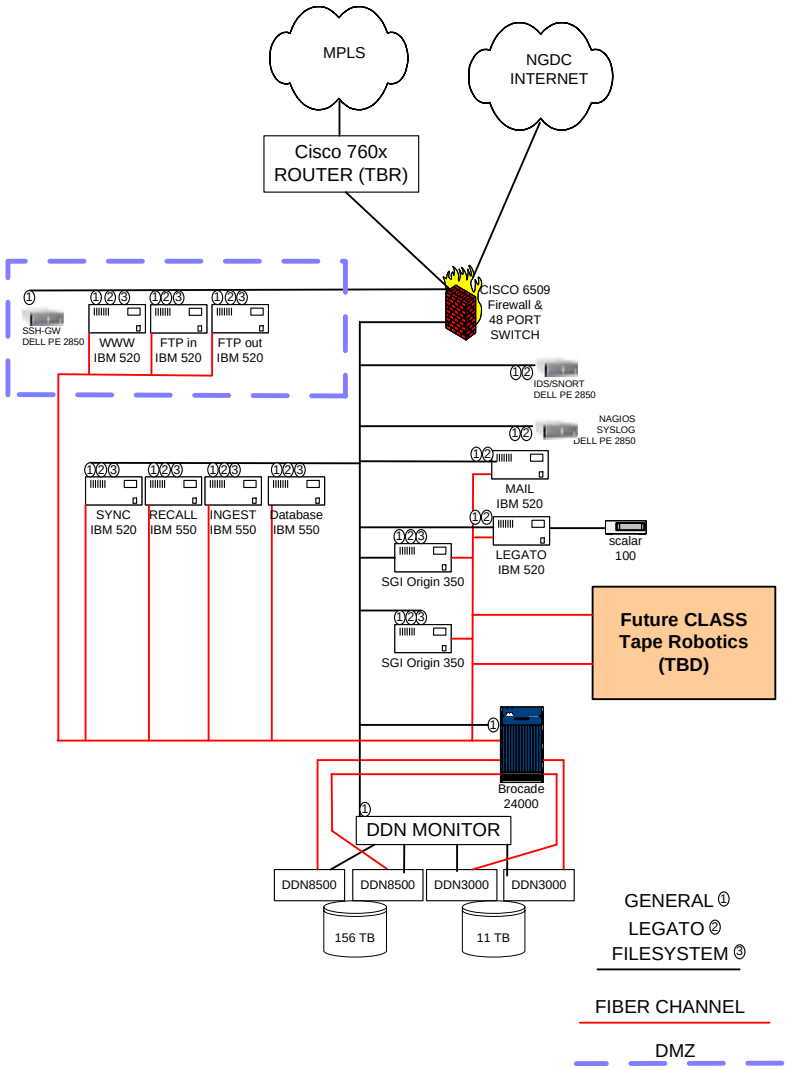

NOAA Satellites and Information

National Environmental Satellite, Data, and Information Service

IT Infrastructure Concerns

- Network capacity
- Security
- Robustness
- Scalability
- Availability, reliability, redundancy
- Outage recovery capability

User Requirements???

- Subsetting requirement?
- Organization of data?
- Reprocessing?
- Volumes of data?
- Frequency of access?
- Delivery options?