ACCS Overview Presentation

TAS-I Campi Bisenzio (FI) - Italy

Template reference : 100181670S-EN

INTERNAL THALES ALENIA SPACE
COMMERCIAL IN CONFIDENCE

All rights reserved, 2009, Thales Alenia Space

Foreground

The Active Charging Compensator System (ACCS) is an instrument dedicated the Active Control of the S/C Charging level through a Controlled Eemission of Electrons generated and accelerated through a suitable electron generation device

The ACCS instrument is under development at TAS-I under ESA ARTES 5 contract financed by ASI

Within the current ARTES 5 contract the development and testing activity is focused on the ACCS Electron Source Device and relevant conditioning electronics

The ACCS Electron Source Device (Neutralizer Unit) is based the hardware successfully developed, tested and qualified within LISA NA for FEEPs & MICROSCOPE programs.
The EQM NU, under LISA PF program, has been successfully submitted to an operational Lifetime test in excess of 6000h.

INTERNAL THALES ALENIA SPACE
COMMERCIAL IN CONFIDENCE

THALES
All rights reserved, 2009, Thales Alenia Space

ACCS Genaral Architecture

The ACCS architecture, in the complete instrument version, includes :

- The AESD subsystem containing:
  - the AESD PS box with the electronic board;
  - the AESD – NU box with the neutralizers;
- A Diagnostic Unit (DU)(currently to be developed and based on a Surface Potential Detector)
- A centralized (PSCU) Power Supply & Control Unit

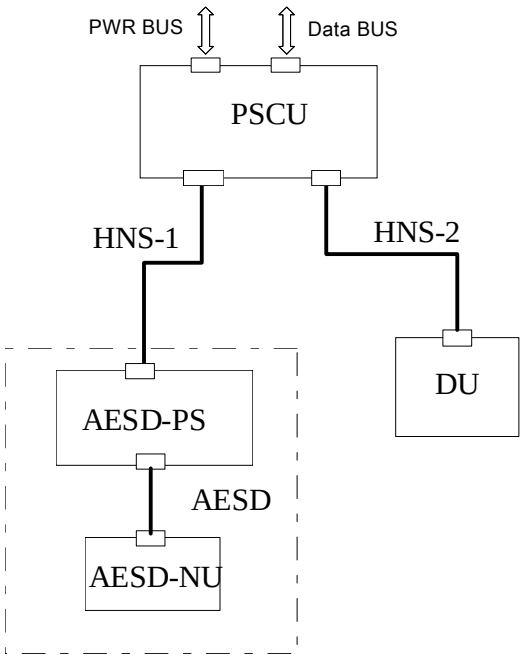

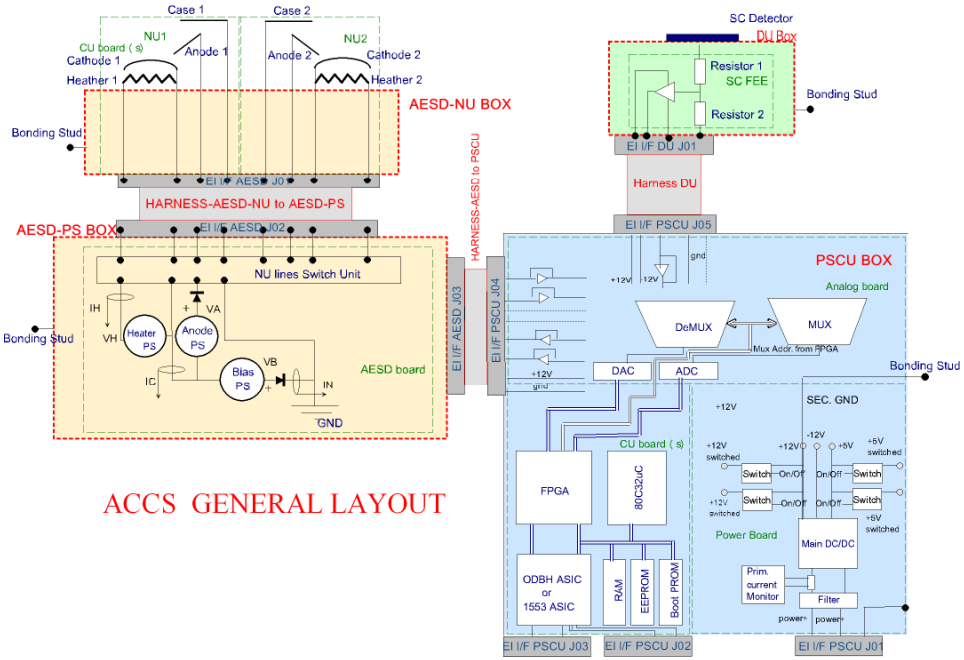

ACCS GENERAL LAYOUT

INTERNAL THALES ALENIA SPACE
COMMERCIAL IN CONFIDENCE

THALES

All rights reserved, 2009, Thales Alenia Space

AESD NU Design/Configuartion

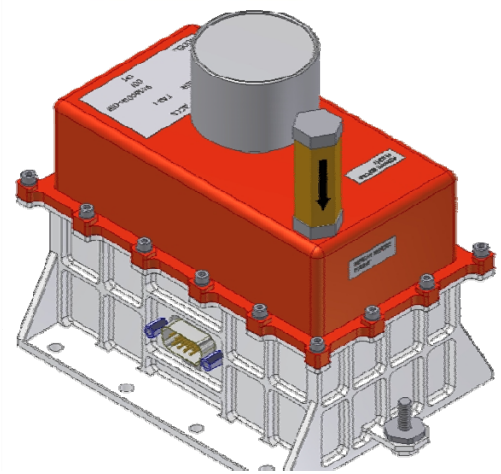

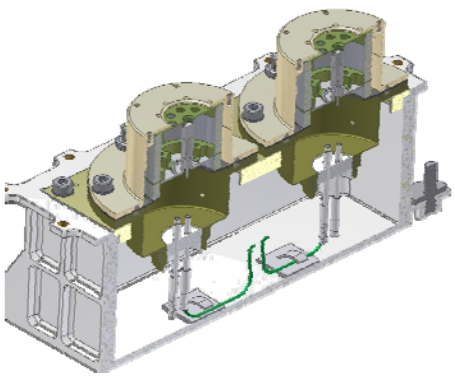

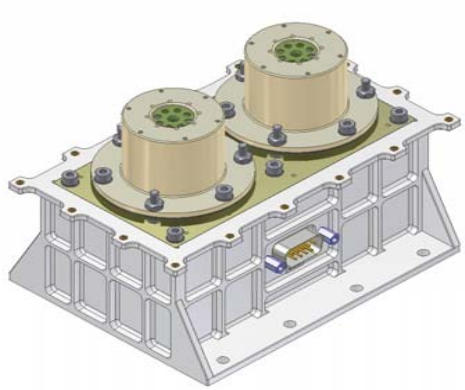

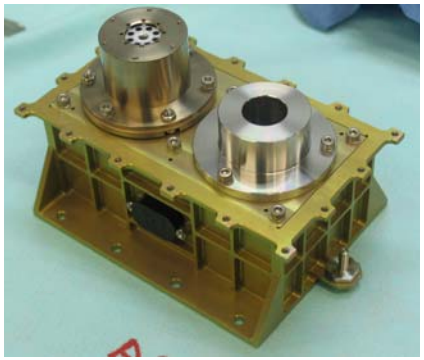

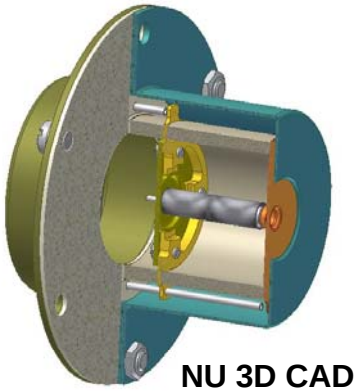

NU 3D CAD view

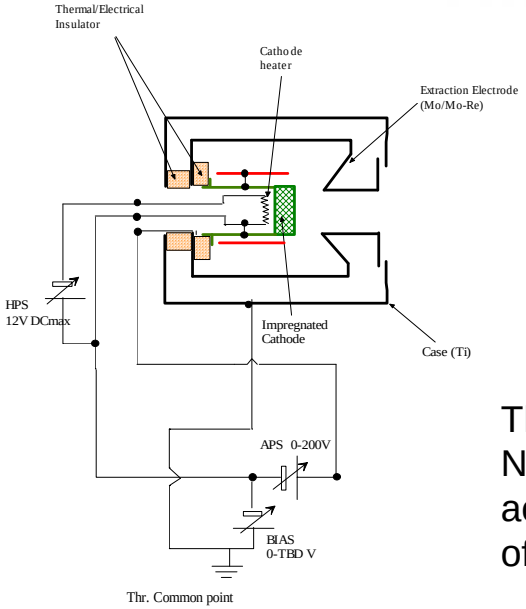

NU electr. sketch

The AESD-NU Assembly contains:
one box with two Neutralizer Units and a cover for storage

The Neutralizer Unit (NU) is based on the design developed under the LISA NA for FEEP program.

The box design is basically the one of the LISA NA Program with minor modifications to allow accommodation of the the connector on one side of the box.

INTERNAL THALES ALENIA SPACE
COMMERCIAL IN CONFIDENCE
THALES
All rights reserved, 2009, Thales Alenia Space

AESD PS Design /Configuration

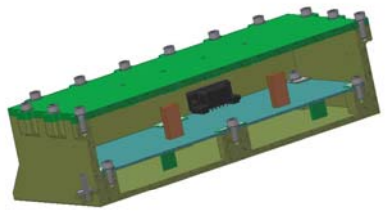

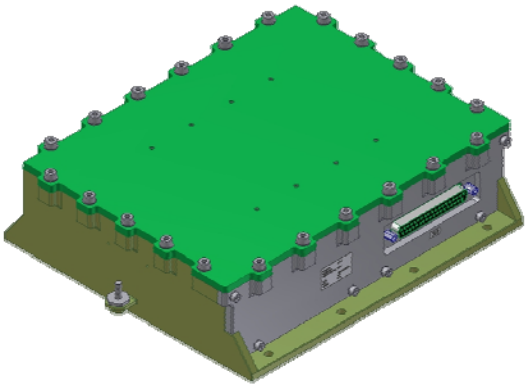

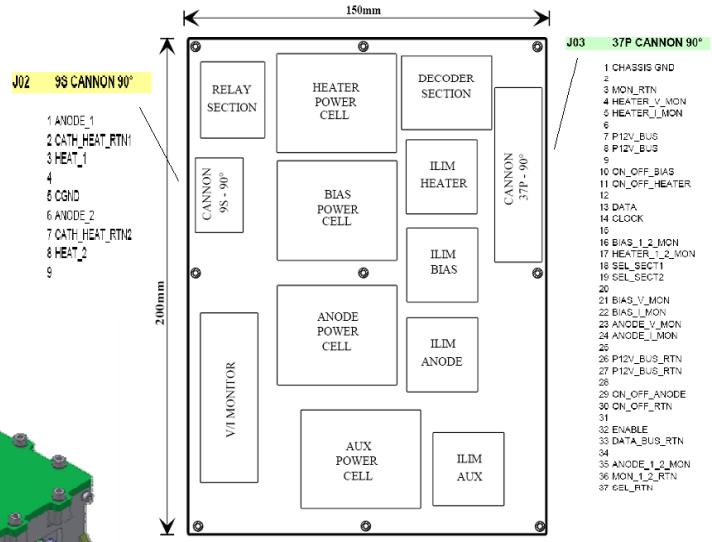

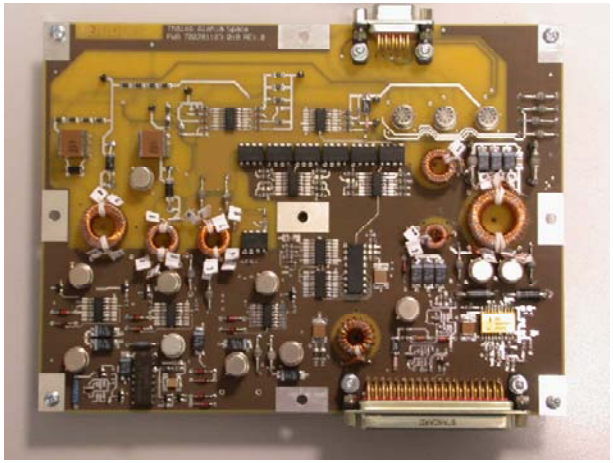

The AESD-PS Assembly contains:
one box with the electronic board Inside. The box is realized with a single Alluminium box. The e-board implements all the necessary functions for the NU's conditioning & operation (anode, bias, heater, aux., power supplies, monitoring, relay and service sections)

INTERNAL THALES ALENIA SPACE
COMMERCIAL IN CONFIDENCE

THALES
All rights reserved, 2009, Thales Alenia Space

PSCU Design Description

The PSCU unit is containined in a dedicated box housing 3 electronic boards stacked on each other.

PSCU main functions are:

- to retrieve power from the main S/C power Bus and to fed secondary power to both AESD and DU units;
- to collect/feed signals from both AESD and DU and to provide relevant TLM data to the S/C bus.
- To accept TLC and to perform the relevant logic, mode operation and mode transitions and the relevant controlling sequences for both the AESD and DU as required by the exchanged TLC or internal initialisation routines.

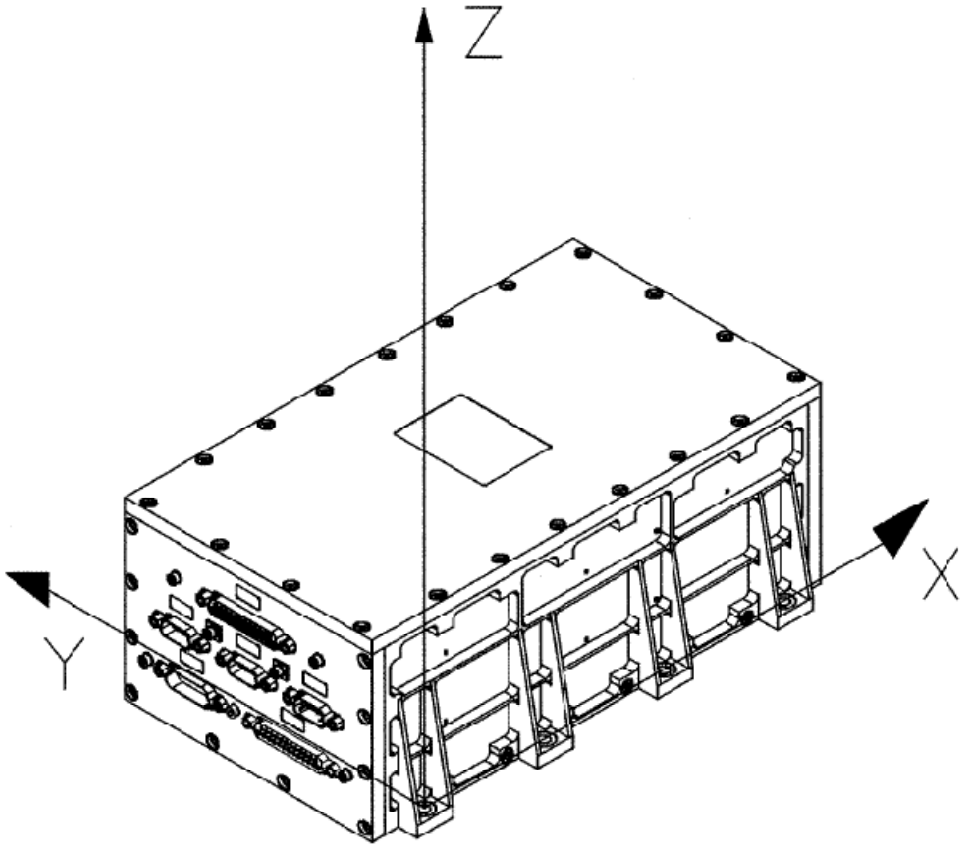

INTERNAL THALES ALENIA SPACE
COMMERCIAL IN CONFIDENCE
THALES
All rights reserved, 2009, Thales Alenia Space

ACCS Budgets

ACCS Preliminary Mass and PowerBudgets

BOX	MASS	EST. ERROR
AESD-NU	465g	±10%
AESD-PS	1900gr	±10%
PSCU	2300gr (TBC)	±20%
HARNESS	350gr (TBC)	±15%
DU	400g (TBC)	±20%

BOX	Max Adsorbed (W)	Max Dissipated (W)
AESD-NU	5±5%	5±5%
AESD-PS	9.5±10%(incl. AESD-NU)	4.5±10%
DU	2.5±1 (TBC)	2.5±1 (TBC)
PSCU	21.5/18.5 (TBC)	10 (TBC)
ACCS (overall)	~21.5÷18.5 (TBC)	~ 21.5÷18.5 (TBC)

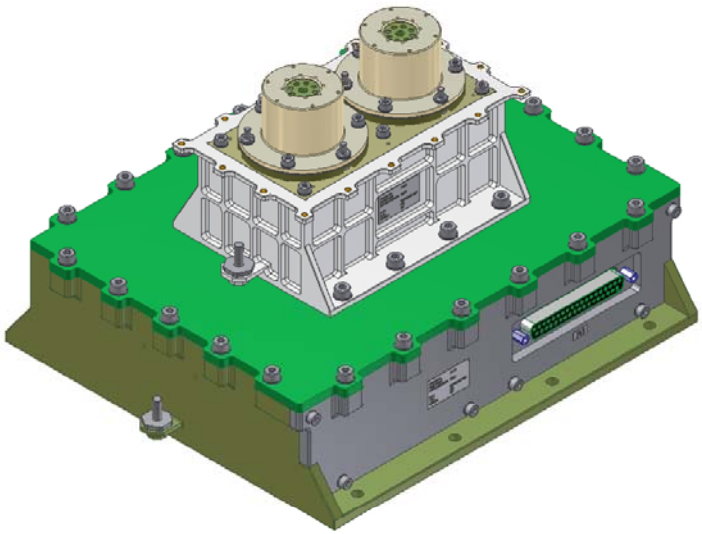

Possible AESD accommodation layout:
AESD-NU box mounted on top of the AESD-PS box

INTERNAL THALES ALENIA SPACE
COMMERCIAL IN CONFIDENCE

THALES
All rights reserved, 2009, Thales Alenia Space

AESD Test

The experimental activities so far performed on the NU confirmed the capability to emit an electron current over 3mA for a target voltage of 50V with anode power of 1.5W and heater power <5W (about 2W).

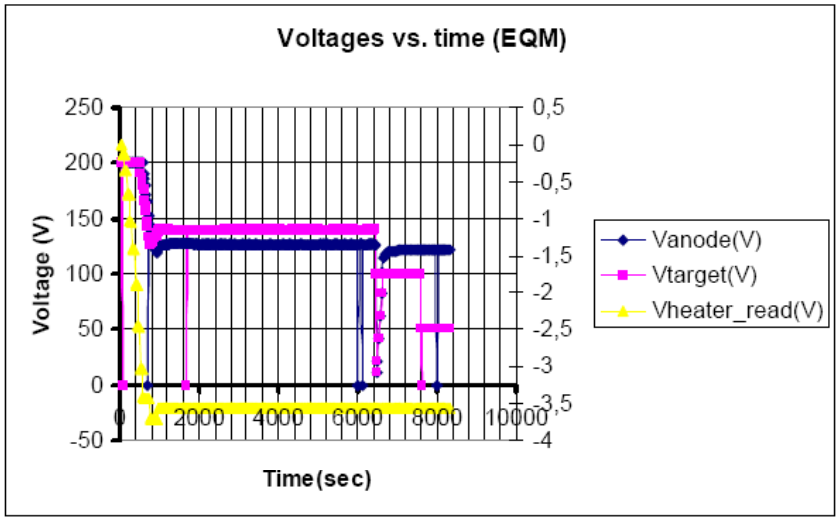

NU Voltage data from functional test performed under the LISA PF program

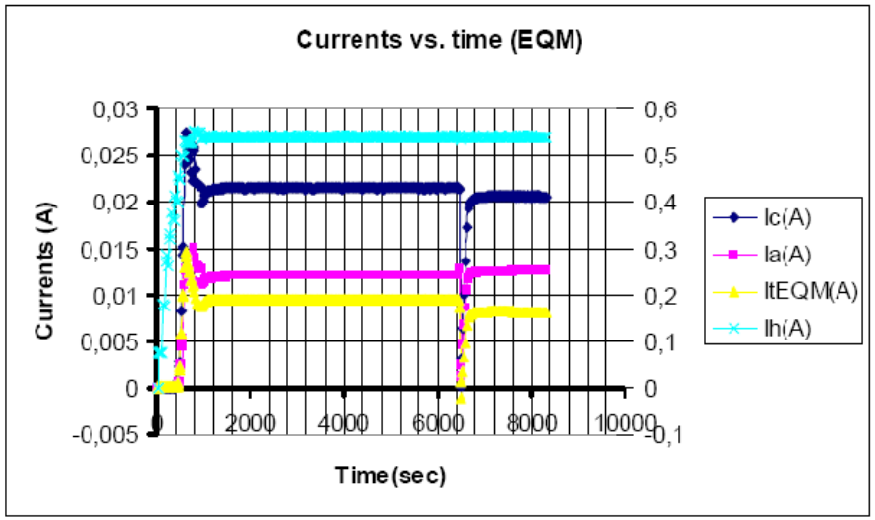

NU Current data from functional test performed under the LISA PF program

INTERNAL THALES ALENIA SPACE
COMMERCIAL IN CONFIDENCE

THALES

All rights reserved, 2009, Thales Alenia Space

AESD Performance Simulation

Simulations/modelization activities have been performed for the theoretical validation of the proposed Neutralizer Unit for performing the S/C charging process

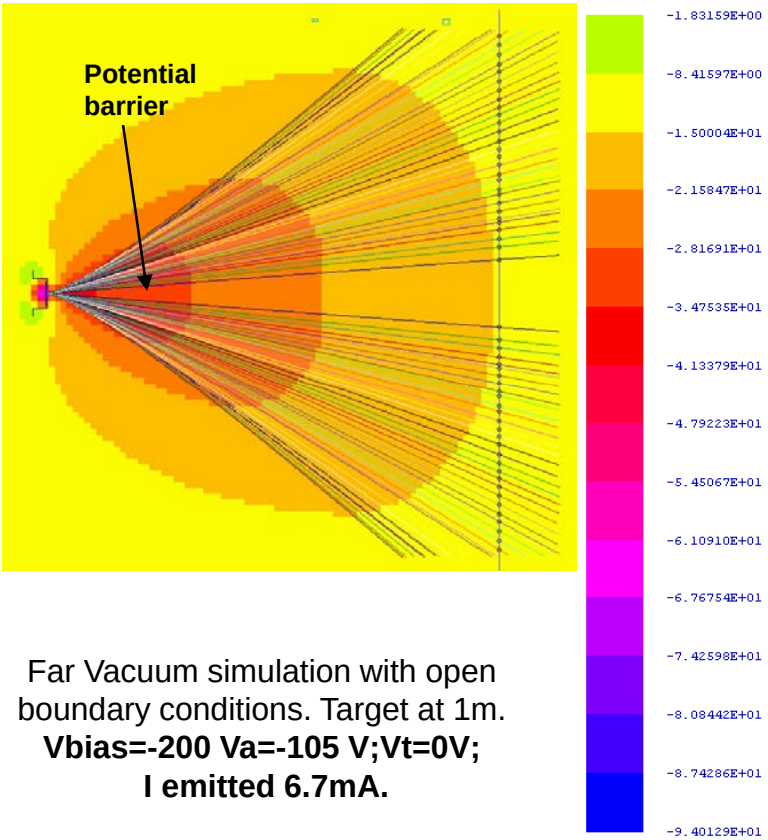

Far Vacuum simulation with open boundary conditions. Target at 1m.
Vbias=-200 Va=-105 V;Vt=0V;
I emitted 6.7mA.

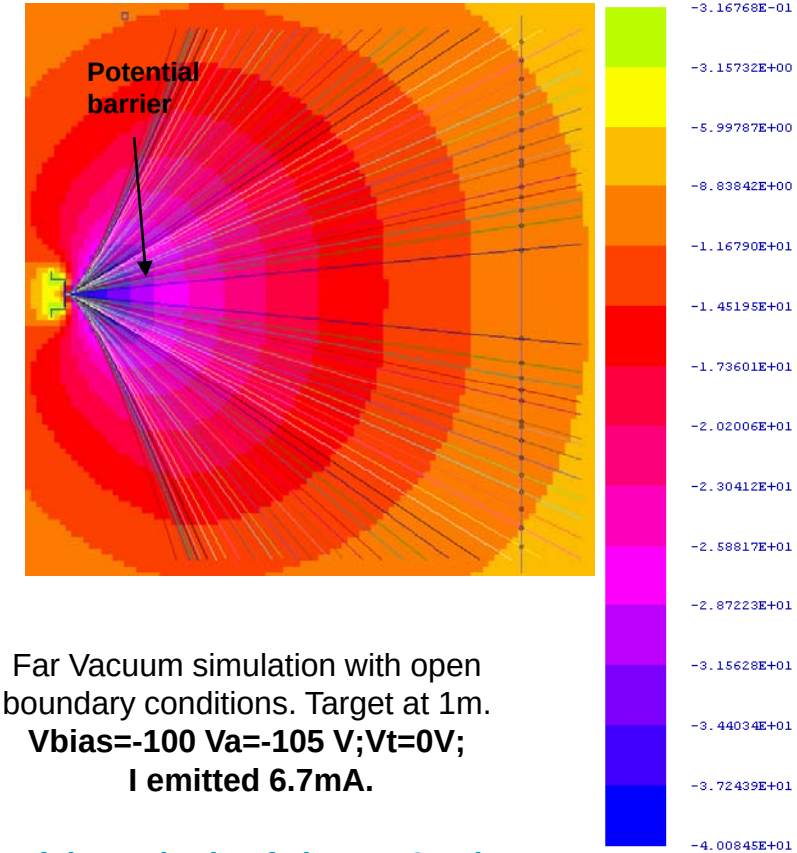

Far Vacuum simulation with open boundary conditions. Target at 1m.
Vbias=-100 Va=-105 V;Vt=0V;
I emitted 6.7mA.

Space charge effect results in a potential barrier in front of the cathode of about -40 Volts

INTERNAL THALES ALENIA SPACE
COMMERCIAL IN CONFIDENCE

THALES
All rights reserved, 2009, Thales Alenia Space